To order Spare Parts, please contact us at 01 8428222, or email at sparesireland@glendimplex.com

BFD614WH Parts List

Spare Parts are stored in our Ireland warehouse, and are shipped with 48 hour courier

Position	Old Part Number	New Part Number	Description	Qty.
101	674001002716	17176000001757	Center Control	1
102	673002401035	12176000002959	Light Guide	1
103	673002401035	12176000002959	Indicator Transfer	1
104	673000890576	12176000001119	Button(Left)	1
105	673000802802	12176000000811	Button(Right)	1
106	673001402002	12176000008468	Fasten Block	2
107	673000492600	12176000A04623	Control Panel	1
108	672001801064	12276000006382	Outer Door	1
109	673001101060	12176000004037	Kick Board	1
201	674000301011	17476000000052	Door Swicth Assembly	1
202	672002200514	12276000005319	Inner Door	1
203	672002300049	12176000003629	Clamping	2
204+205+206	672001400062	12276000001731	Left Hinge Assembly	1
207	672001700002	12276000001459	Dispenser Bracket	2
208	674000800032	17476000001469	Dispenser	1
205+206+209	672001400061	12276000001778	Right Hinge Assembly	1
210	672001200061	12276000001852	Hinge Plate	1
301	673000200554	12176000010919	Top Panel Assembly	1
302	672001602037	12276000000972	Left Side Panel	1
303	673003100024	12176000003869	Upper Back Support	1
304	673001300551	12176000008517	Top Basket Guider Link Stopper(Back)	2
305	672002900084	12276000002824	Tub And Frame Assembly	1
306	672001700023	12276000001330	Top Basket Guider Assembly(Left)	1
307	672001700024	12276000001346	Topb Asket Guider Assembly(Right)	1
308	673001400317	12176000010336	Top Basket Guider Supporter Assembly	4
309	673001300552	12176000008444	Top Basket Guider Supporting Holder	4
310	673001401022	12176000010412	Basket Guider Supporter Assembly	4
311	673001300555	12176000008573	Basket Guider Supporting Holder	4
312	673001300639	12176000008426	Upper Basket Guider Link Stopper(Back)	2
313	672001400068	12176000009491	Door Lock Hook	1
314	672001700025	12276000001320	Upper Basket Guider Assembly(Left)	1
315	673001700132	12676000000859	Door Seal Gasket	1
316	672002300110	12276000001818	Anti-Noise Borad	1
317	672001700026	12276000001321	Upper Basket Guider Assembly(Right)	1
318	673000102014	12176000010248	Back Board	1
319	672001600542	12276000001246	Right Side Panel	1
401	674000000266	17476000000176	Power Cord	1
402	673002800187	12176000010640	Air Breaker Nut	1
403	674000700049	17476000001331	Softener Assembly	1
405	673002400251	12176000003715	Weight Block Holder	2
406	676000600017	12776000000005	Weight Block	1
407	673001100221	12176000009741	Adjusting Feet	4
408	673001001006	12976000000392	Digging Rope	2
411	672000100110	12976000000133	Door Spring	2
412	672001100016	12976000001001	Adjust Screw Of Door Spring	2
409+410+413	670400050749	12276000000117	Base Cover Assembly	1
414	673000101202	12176000003092	Base Cover	1
404+415	673000900354	12676000000138	Drain Pipe Assembly	1
416	673002700611	12176000003906	Air Breaker Assembly	1
417	673001500107	12676000000713	Air Breakdr Gasket	1

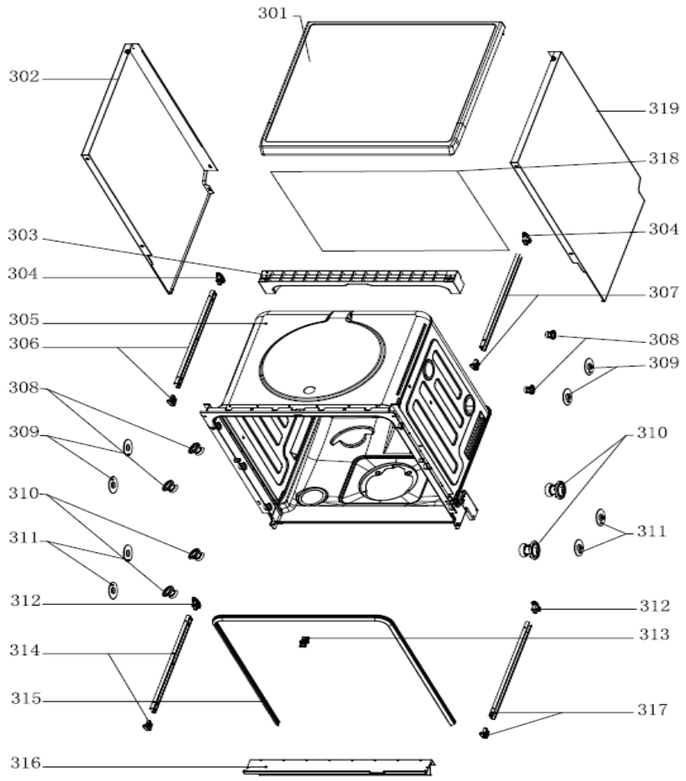

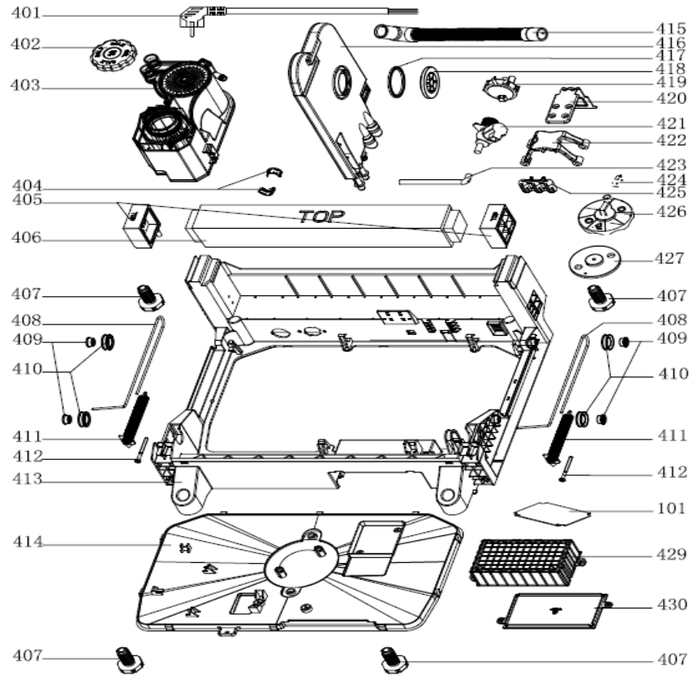

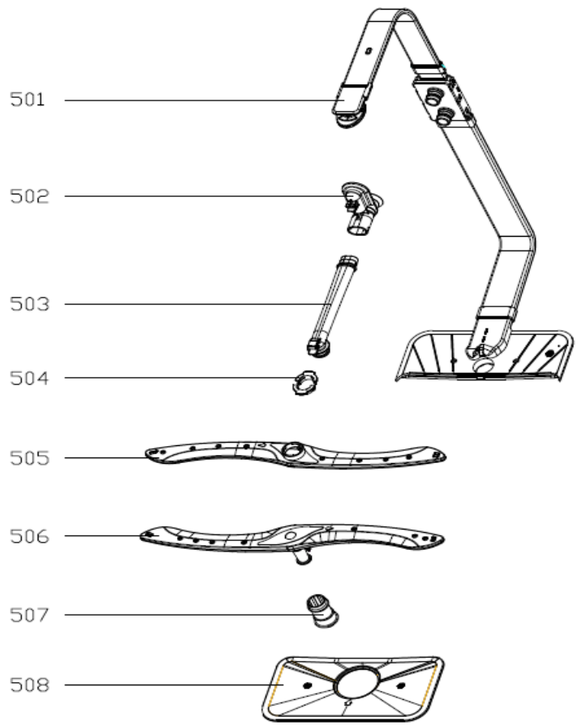

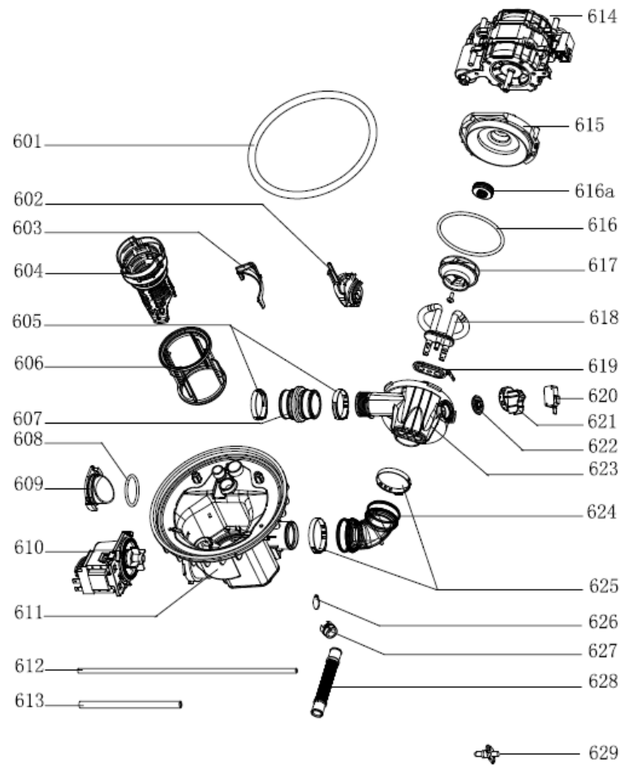

BFD614WH Parts List
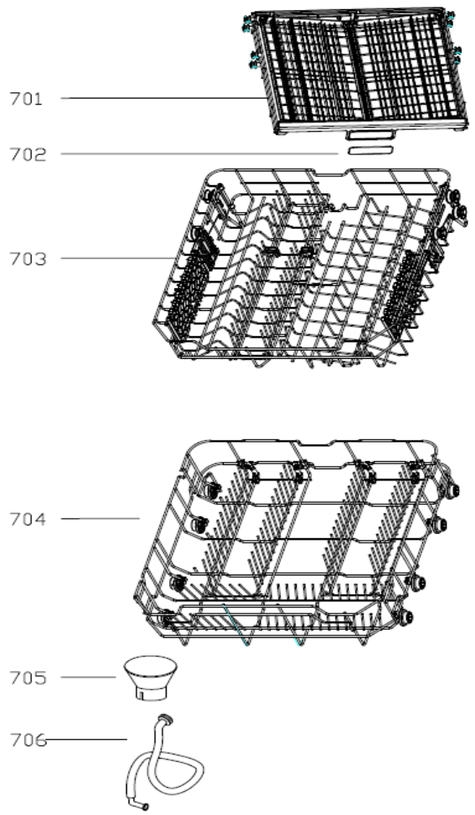
418	673001600088	12176000009541	Air Breaker Nut	1
419	674000302020	17476000001222	Pressure Switch	1
421	674000200032	17476000001142	Inlet Valve Assembly	1
420+422	672000201032	12276000001494	Pump Support Assembly	1
423	673000900289	12676000000140	Air Breaker Inlet Pipe	1
424	674010030006	17476000001137	Overflow Switch	1
425	673000905009	12176000010462	Connecter Cap	1
426	673001490013	12876000000050	Float	1
427	673001400197	12176000003125	Overflow Switch Seat	1
429	673002400223	12176000003751	Pcb Seat	1
430	673002400224	12176000003853	Pcb Seat Cover	1
501	673000903021	12176000009472	Inner Hose Assembly	1
502	673001200052	12176000008710	Middle Spayer Pipe Joint	1
503	673000900302	12176000009256	Middle Spayer Pipe	1
504	673001300565	12176000003638	Middle Spayer Clamping Ring	2
505	673000310020	12176000009089	Middle Spayer	1
506	673000330015	12176000009161	Lower Sprayer	1
507	673001300548	12176000008683	Lower Sprayer Seat	1
508	673002500134	12176000003689	Main Filter	1
601	673001500081	12676000000823	Sump Gasket	1
604	673001300644	12176000009640	Filter Handle	1
605	672000700007	12976000000327	396 Clamping	2
606	673002500111	12176000003676	Cylindr Filter	1
607	673000900406	12676000000146	Washing Pump Outlet Hose	1
610	674000600168	11001011000449	Drainage Pump	1
602+603+608 +609+611+626+627	673000700129	12176000009424	Sump Assembly	1
612	673000902001	12676000000651	Pvc Pipe	1
613	673000902000	12676000000168	Softener Outlet Pipe	1
614	674005600110	17476000001554	Motor Assembly	1
615	673001302000	12176000002603	Lower Pump Body	1
616a	673001500035	12676000000931	Seal Oil	1
616	673001500124	12676000000780	Pump Gasket	1
617	673001301008	12176000008792	Impeller	1
618+619+620 +621+622+623	674001100084	17476000001408	Heating Elements Assembly	1
624	673000900407	12676000000100	Washing Pump Inlet Hose	1
625	672000701001	12976000000308	460 Clamping	2
628	673000900287	12676000000947	Inner Drain Pipe	1
629	674000900053	17176000000311	Temperature Sensor	1
701	673003200178	12176000002832	Cutlery Shelf Assembly	1
702	672000202225	12276000007147	Cover Of Cutlery Shelf Assembly	1
703	672000810656	12976000001474	Upper Basket Assembly	1
704	672000820064	12976000001463	Lower Basket Assembly	1
705	673002200165	12176000010312	Salt Filler	1
706	673005400172	12676000000561	Inlet Hose	1