CKBLL-A01-A	重 要 度	[B]

技术要求

1.颜色要求：封面：黑白印刷
　　内页：黑白印刷；
　批量时要求统一，不能有明显色差，
2.版面内容：
　图案与文字应印刷清晰、规范，不能有印刷缺陷；
3.页面印刷：双面印刷；
4.成型方式：骑马钉；
5.成品尺寸：A5(140X210)，
　尺寸公差按GB/T 1804-c；
6.批量生产前须送样确认。

						封面：80g双胶 内页：80g双胶	广东奥马冰箱有限公司
借(通)用件登记							说明书
	标志	处数	更改文件号	签 名	日 期	重 量	比 例
出图审查	设计		会签				
	制图	黄英婷	标准化	刘金利		共 1 张	第 1 张
日　　期	审核	温淦仙	批准	李梅方		视角符号	CKBLL-A01-A
	工艺		日期	2018-03-17			

User Instruction

Refrigerator Freezer

BFF205WH
BFF205IX

Content

1. Safety Information	Page 1~5
2. Overview	Page 6
3. Reverse Door	Page 7~9
4. Installation	Page 10 ~11
5. Daily Use	Page 12~15

⚠ Safety information

In the interest of your safety and to ensure the correct use, before installing and first using the appliance, read this user manual carefully, including its hints and warnings. To avoid unnecessary mistakes and accidents, it is important to ensure that all people using the appliance are thoroughly familiar with its operation and safety features. Save these instructions and make sure that they remain with the appliance if it is moved or sold, so that everyone using it through its life will be properly informed on appliance use and safety.
For the safety of life and property keep the precautions of these user's instructions as the manufacturer is not responsible for damages caused by omission.

Children and vulnerable people safety

- This appliance can be used by children aged from 8 years and above and persons with reduced physical, sensory or mental capabilities or lack of experience and knowledge if they have been given super vision or instruction concerning use of the appliance in a safe way and understand the hazards involved.
- Children should be supervised to ensure that they do not play with the appliance.
- Cleaning and user maintenance shall not be made by children unless they are aged from 8 years and above and supervised.
- Keep all packaging well away from children. There is risk of suffocation.
- If you are discarding the appliance pull the plug out of the socket, cut the connection cable (as close to the appliance as you can) and remove the door to prevent playing children to suffer electric shock or to close themselves into it.
- If this appliance featuring magnetic door seals is to replace an older appliance having a spring lock (latch) on the door or lid, be sure to make that spring lack unusable before you discard the old appliance. This will prevent it from becoming a death trap for a child.

General safety

⚠**WARNING!** Keep ventilation openings, in the appliance enclosure or in the built-in structure, clear of obstruction.

⚠**WARNING!** Do not use mechanical devices or other means to accelerate the defrosting process, other than those recommended by the manufacturer.

⚠**WARNING!** Do not damage the refrigerant circuit.

⚠ Safety information

⚠**WARNING!** Do not use other electrical appliances (such as ice cream makers) inside of refrigerating appliances, unless they are approved for this purpose by the manufacture.

⚠**WARNING!** Do not touch the light bulb if it has been on for a long period of time because it could be very hot.[1)]

- Do not store explosive substances such as aerosol cans with a flammable propellant in this appliance.
- The refrigerant isobutane (R600a) is contained within the refrigerant circuit of the appliance, a natural gas with a high level of environmental compatibility, which is nevertheless flammable.
- During transportation and installation of the appliance, be certain that none of the components of the refrigerant circuit become damaged.
  - avoid open flames and sources of ignition
  - thoroughly ventilate the room in which the appliance is situated
- It is dangerous to alter the specifications or modify this product in any way. Any damage to the cord may cause a short circuit, fire and/or electric shock.
- This appliance is intended for domestic use only. Any non domestic or commercial use will render the warranty null and void.

⚠**WARNING!** Any electrical components(plug, power cord, compressor and etc.) must be replaced by a certified service agent or qualified service personnel.

⚠**WARNING!** The light bulb supplied with this appliance is a “special use lamp bulb” usable only with the appliance supplied. This “special use lamp” is not usable for domestic lighting.[1)]

1) If there is a light in the compartment.

- Power cord must not be lengthened.
- Make sure that the power plug is not squashed or damaged by the back of the appliance. A squashed or damaged power plug may overheat and cause a fire.
- Make sure that have access to the mains plug of the appliance.
- Do not pull the mains cable.
- If the power plug socket is loose, do not insert the power plug. There is a risk of electric shock or fire.
- You must not operate the appliance without the lamp.
- This appliance is heavy. Care should be taken when moving it.
- Do not remove nor touch items from the freezer compartment if you hands are damp/wet, as this could cause skin abrasions or frost/freezer burns.
- Avoid prolonged exposure of the appliance to direct sunlight.

Daily use

- Do not put hot items on the plastic parts in the appliance.
- Do not place food products directly against the rear wall.
- Frozen food must not be re-frozen once it has been thawed out.[1)]
- Store pre-packed frozen food in accordance with the frozen food manufacture's instructions.[1)]
- Appliance's manufactures storage recommendations should be strictly adhered to. Refer to relevant instructions.
- Do not place carbonated of fizzy drinks in the freezer compartment as it creates pressure on the container, which may cause it to explode, resulting in damage to the appliance.[1)]
- Ice lollies can cause frost burns if consumed straight from the appliance.[1)]

Care and cleaning

- Before maintenance, switch off the appliance and disconnect the mains plug from the mains socket.
- Do not clean the appliance with metal objects.
- Do not use sharp objects to remove frost from the appliance. Use a plastic scraper.[1)]
- Regularly examine the drain in the refrigerator for defrosted water. If necessary, clean the drain. If the drain is blocked, water will collect in te bottom of the appliance.[2)]

1) If there is a freezer compartment.
2) If there is a fresh-food storage compartment.

Installation

Important! For electrical connection carefully follow the instructions given in specific paragraphs.

- Unpack the appliance and check if there are damages on it. Do not connect the appliance if it is damaged. Report possible damages immediately to the place you bought it. In that case retain packing.
- It is advisable to wait at least four hours before connecting the appliance to allow the oil to flow back in the compressor.
- Adequate air circulation should be around the appliance, lacking this leads to overheating. To achieve sufficient ventilation follow the instructions relevant to installation.
- Wherever possible the spacers of the product should be against a wall to avoid touching or catching warm parts (compressor, condenser) to prevent possible burn.
- The appliance must not be located close to radiators or cookers.
- Make sure that the mains plug is accessible after the installation of the appliance.

Service

- Any electrical work required to do the servicing of the appliance should be carried out by a qualified electrician or competent person.
- This product must be serviced by an authorized Service Center, and only genuine spare parts must be used.

Energy saving

- Don’t put hot food in the appliance;
- Don’t pack food close together as this prevents air circulating;
- Make sure food doesn’t touch the back of the compartment(s);
- If electricity goes off, don’t open the door(s);
- Don’t open the door(s) frequently;
- Don’t keep the door(s) open for too long time;
- Don’t set the thermostat on exceedingly cold temperatures;
- Some accessories, such as drawers, can be removed to get larger storage volume and lower energy consumption.

Environment Protection

This appliance does not contain gases which could damage the ozone layer, in either its refrigerant circuit or insulation materials. The appliance shall not be discarded together with the urban refuse and rubbish. The insulation foam contains flammable gases: the appliance shall be disposed according to the appliance regulations to obtain from your local authorities. Avoid damaging the cooling unit, especially the heat exchanger. The materials used on this appliance marked by the symbol ♲ are recyclable.

The symbol on the product or on its packaging indicates that this product may not be treated as household waste. Instead it should be taken to the appropriate collection point for the recycling of electrical and electronic equipment. By ensuring this product is disposed of correctly, you will help prevent potential negative consequences for the environment and human health, which could otherwise be caused by inappropriate waste handling of this product. For more detailed information about recycling of this product, please contact your local council, your household waste disposal service or the shop where you purchased the product.

Packaging materials

The materials with the symbol are recyclable. Dispose of the packaging in accordance with local regulations.

Disposal of the appliance

1. Disconnect the mains plug from the mains socket.
2. Cut off the mains cable and discard it.

Overview

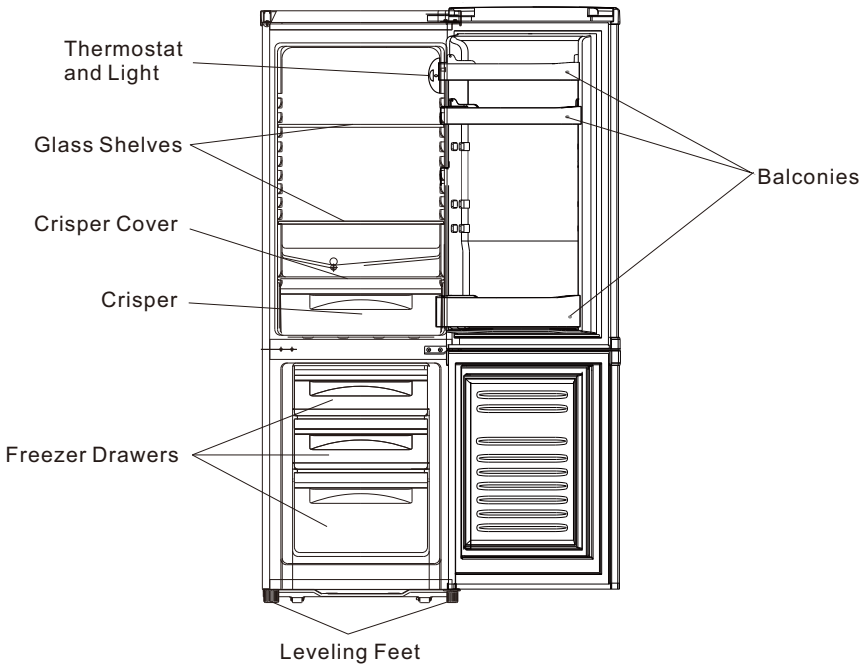

This illustration is only for hinting, the detail please check your appliance.

Reverse Door

Tool required: Philips screwdriver, Flat bladed screwdriver, Hexagonal spanner.

- Ensure the unit is unplugged and empty.
- To take the door off, it is necessary to tilt the unit backwards. You should rest the unit on something solid so that it will not slip during the door reversing process.
- All parts removed must be saved to do the reinstallation of the door.
- Do not lay the unit flat as this may damage the coolant system.
- It's better that 2 people handle the unit during assembly.

1. Remove four screws in top cover and then lift it.

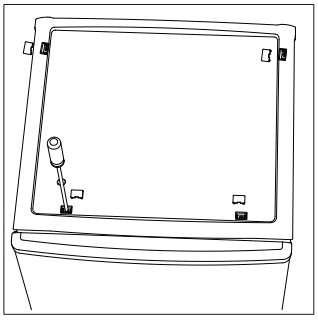

2. Unscrew top hinge and then remove upper door and place it on a soft pad to avoid scratch.

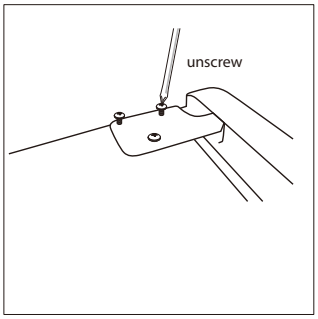

3. Remove the pin with a screwdriver and flip the hinge bracket. Then refit the pin to hinge bracket.

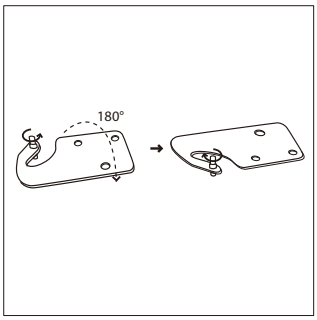

Reverse Door

4. Unscrew middle hinge. Then lift lower door and place it on a soft pad to avoid scratch.

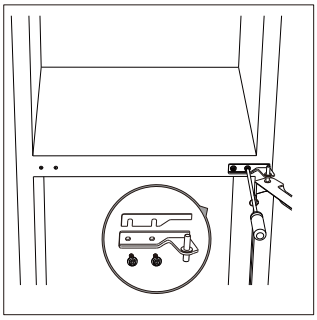

5. Move the hinge hole covers from left side to right side.

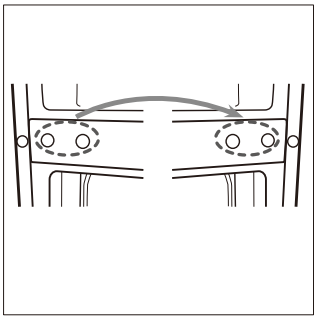

6. Unscrew bottom hinge. Then remove the adjustable feet from both side.

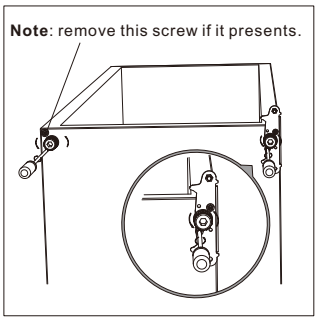

7. Unscrew and remove the bottom hinge pin, turn the bracket over and replace it.

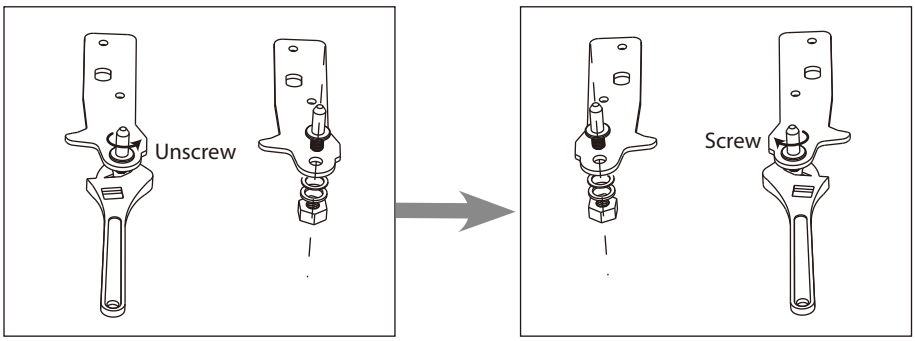

Reverse Door

8. Refit the bracket fitting the bottom hinge pin. Replace both adjustable feet. Transfer the lower door to the property position.

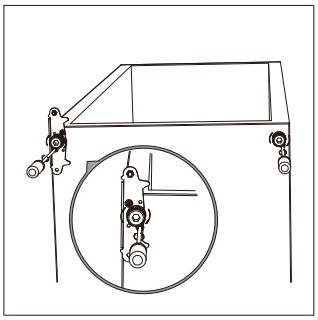

9. Make the middle hinge reverse the direction180°C, then transfer it to the left property position. Make the middle hinge pin in the upper hole of the lower door, then tight the bolts.

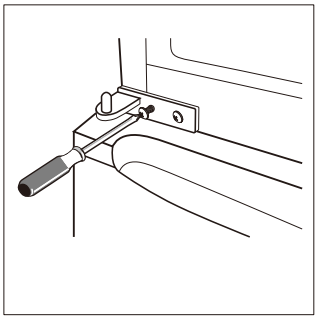

10. Place the upper door back on. Ensure the door is aligned horizontally and vertically so that the seal are closed on all sides before finally tightening the top hinge. Then inert the hinge and screw it to the top of the unit.

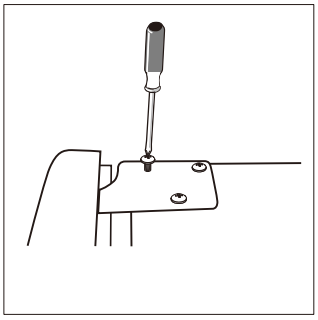

11. Put the top cover and then screw back.

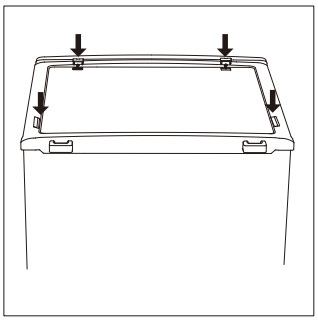

Installation

Install door external handle (if external handle is present)

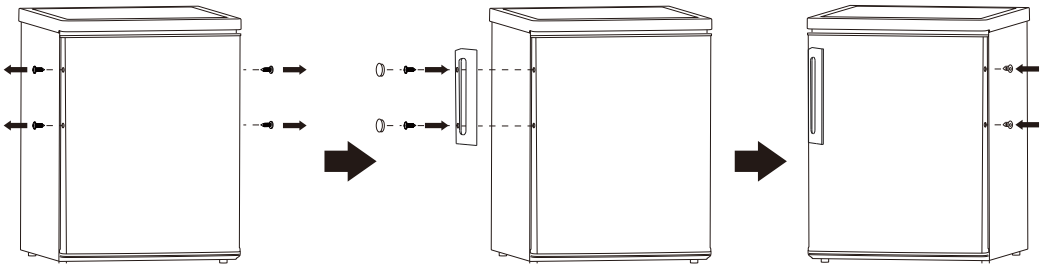

Space Requirement

- Keep enough space of door open.
- Keep at least 50mm gap at two sides.

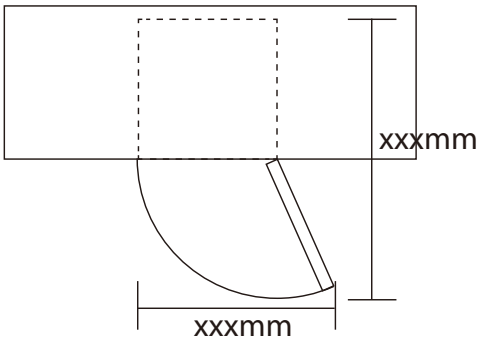

Levelling the unit

To do this adjust the two levelling feet at front of the unit.

If the unit is not level, the doors and magnetic seal alignments will not be covered properly.

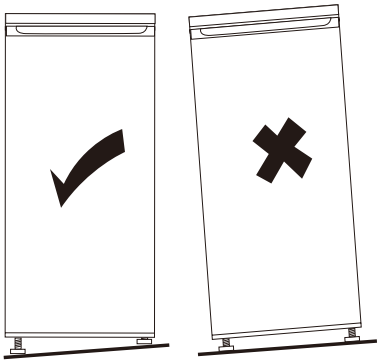

Installation

Positioning

Install this appliance at a location where the ambient temperature corresponds to the climate class indicated on the rating plate of the appliance:

Climate class	Ambient temperature
SN	+10°C to +32°C
N	+16°C to +32°C
ST	+16°C to +38°C
T	+16°C to +43°C

Location

The appliance should be installed well away from sources of heat such as radiators, boilers, direct sunlight etc. Ensure that air can circulate freely around the back of the cabinet. To ensure best performance, if the appliance is positioned below an overhanging wall unit, the minimum distance between the top of the cabinet and the wall unit must be at least 100 mm. Ideally, however, the appliance should not be positioned below overhanging wall units. Accurate leveling is ensured by one or more adjustable feet at the base of the cabinet.

Warning! It must be possible to disconnect the appliance from the mains power supply; the plug must therefore be easily accessible after installation.

Electrical connection

Before plugging in, ensure that the voltage and frequency shown on the rating plate correspond to your domestic power supply. The appliance must be earthed. The power supply cable plug is provided with a contact for this purpose. If the domestic power supply socket is not earthed, connect the appliance to a separate earth in compliance with current regulations, consulting a qualified electrician.
The manufacturer declines all responsibility if the above safety precautions are not observed.
This appliance complies with the E.E.C. Directives.

Daily Use

First use

Cleaning the interior

Before using the appliance for the first time, wash the interior and all internal accessories with lukewarm water and some neutral soap so as to remove the typical smell of a brand new product, then dry thoroughly.

Important! Do not use detergents or abrasive powders, as these will damage the finish.

Temperature Setting

- Plug on your appliance. The internal temperature is controlled by a thermostat. There are 8 settings . 1 is warmest setting and 7 is coldest setting and 0 is off.
- The appliance may not operate at the correct temperature if it is in a particularly hot or if you open the door often.

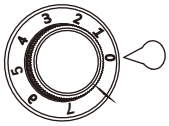

Freezing fresh food

- The freezer compartment is suitable for freezing fresh food and storing frozen and deep-frozen food for a long time.
- Place the fresh food to be frozen in the freezer compartment.
- The maximum amount of food that can be frozen in 24 hours is specified on the rating plate.
- The freezing process lasts 24 hours: during this period do not add other food to be frozen.

Storing frozen food

When first starting-up or after a period out of use, before putting the product in the compartment let the appliance run at least 2 hours on the higher settings.

Important! In the event of accidental defrosting, for example the power has been off for longer than the value shown in the technical characteristics chart under “rising time”, the defrosted food must be consumed quickly or cooked immediately and then re-frozen (after cooked).

Thawing

Deep-frozen or frozen food, prior to be used, can be thawed in the fridge compartment or at room temperature, depending on the time available for this operation.
Small pieces may even be cooked still frozen, directly from the freezer. In this case, cooking will take longer.

Ice-cube

This appliance may be equipped with one or more ice-box to produce ice.

Accessories

Movable shelves

The walls of the refrigerator are equipped with a series of runners so that the shelves can be positioned as desired.

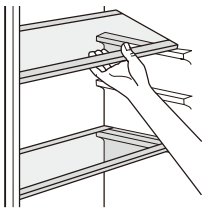

Positioning the door balconies

To permit storage of food packages of various sizes, the door balconies can be placed at different heights. To make these adjustments proceed as follows: gradually pull the balcony in the direction of the arrows until it comes free, then reposition as required.

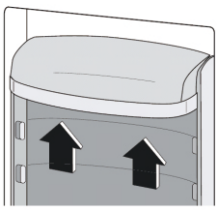

Daily Use

Helpful hints and tips

To help you make the most of the freezing process, here are some important hints:

- the maximum quantity of food which can be frozen in 24 hrs. is shown on the rating plate;
- the freezing process takes 24 hours. No further food to be frozen should be added during this period;
- only freeze top quality, fresh and thoroughly cleaned, foodstuffs;
- prepare food in small portions to enable it to be rapidly and completely frozen and to make it possible subsequently to thaw only the quantity required;
- wrap up the food in aluminium foil or polythene and make sure that the packages are airtight;
- do not allow fresh, unfrozen food to touch food which is already frozen, thus avoiding a rise in temperature of the latter;
- lean foods store better and longer than fatty ones; salt reduces the storage life of food;
- water ices, if consumed immediately after removal from the freezer compartment, can possibly cause the skin to be freeze burnt;
- it is advisable to show the freezing in date on each individual pack to enable you removal from the freezer compartment, can possibly cause the skin to be freeze burnt;
- it is advisable to show the freezing in date on each individual pack to enable you to keep tab of the storage time.

Hints for storage of frozen food

To obtain the best performance from this appliance, you should:

- make sure that the commercially frozen foodstuffs were adequately stored by the retailer;
- be sure that frozen foodstuffs are transferred from the food store to the freezer in the shortest possible time;
- not open the door frequently or leave it open longer than absolutely necessary.
- once defrosted, food deteriorates rapidly and cannot be re-frozen;
- do not exceed the storage period indicated by the food manufacture.

Hints for fresh food refrigeration

To obtain the best performance:

- Do not store warm food or evaporating liquids in the refrigerator
- Do cover or wrap the food, particularly if it has a strong flavour
- Make (all types): wrap in polythene bags and place on the glass shelves above the vegetable drawer.
- For safety, store in this way only one or two days at the most.
- Cooked foods, cold dishes, etc…: these should be covered and may be placed on any shelf.
- Fruit and vegetables: these should be thoroughly cleaned and placed in the special drawer(s) provided.
- butter and cheese: these should be placed in special airtight containers or wrapped in aluminum foil or polythene bags to exclude as much air as possible.
- Milk bottle: these should have a cap and should be stored in the balconies on the door.
- Bananas, potatoes, onions and garlic, if not packed, must not be kept in the fridge.

Cleaning

For hygienic reasons the appliance interior, including interior accessories, should be cleaned regularly.

Caution! The appliance may not be connected to the mains during cleaning. Danger of electrical shock! Before cleaning switch the appliance off and remove the plug from the mains, or switch off or turn out the circuit breaker or fuse. Never clean the appliance with a steam cleaner. Moisture could accumulate in electrical components, danger of electrical shock! Hot vapors can lead to the damage of plastic parts. The appliance must be dry before it is placed back into service.

Important! Ethereal oils and organic solvents can attack plastic parts, e.g. lemon juice or the juice form orange peel, butyric acid, cleanser that contain acetic acid.

Clean drain hole

To avoid defrost water overflowing into the fridge, periodically clean the drain hole at back of fridge compartment. Use a cleaner to clean the hole as showed in right picture.

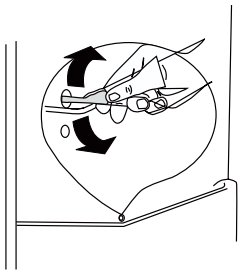

1) If the condenser is at back of appliance.

Daily Use

- Do not allow such substances to come into contact the appliance parts.
- Do not use any abrasive cleaners
- Remove the food from the freezer. Store them in a cool place, well covered.
- Switch the appliance off and remove the plug from the mains, or switch off or turn out the circuit breaker of fuse.
- Clean the appliance and the interior accessories with a cloth and lukewarm water. After cleaning wipe with fresh water and rub dry.
- After everything is dry place appliance back into service.

Defrosting of the freezer

The freezer compartment, however, will become progressively covered with frost. This should be removed. Never use sharp metal tools to scrape off frost from the evaporator as you could damage it.
However, when the ice becomes very thick on the inner liner, complete defrosting should be carried out as fellows:

- pull out the plug from the socket;
- remove all stored food, wrap it in several layers of newspaper and put it in a cool place;
- keep the door open, and placing a basin underneath of the appliance to collect the defrost water;
- when defrosting is completed, dry the interior thoroughly
- replace the plug in the power socket to run the appliance again.

Replace the lamp

The internal light is a LED type. To replace the lamp, please contact qualified technician.

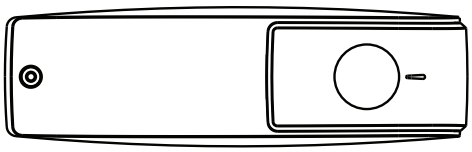

Daily Use

Troubleshooting

Caution! Before troubleshooting, disconnect the power supply. Only a qualified electrician of competent person must do the troubleshooting that is not in this manual.

Important! There are some sounds during normal use (compressor, refrigerant circulation).

Problem	Possible cause	Solution
Appliance does not work	Temperature regulation knob is set at number “0”.	Set the knob at other number to switch on the appliance.
	Mains plug is not plugged in or is loose	Insert mains plug.
	Fuse has blown or is defective	Check fuse, replace if necessary.
	Socket is defective	Mains malfunctions are to be corrected by an electrician.
The food is too warm.	Temperature is not properly adjusted.	Please look in the initial Temperature Setting section.
	Door was open for an extended period.	Open the door only as long as necessary.
	A large quantity of warm food was placed in the appliance within the last 24 hours.	Turn the temperature regulation to a colder setting temporarily.
	The appliance is near a heat source.	Please look in the installation location section.
Appliance cools too much	Temperature is set too cold.	Turn the temperature regulation knob to a warmer setting temporarily.
Unusual noises	Appliance is not level.	Re-adjust the feet.
	The appliance is touching the wall or other objects.	Move the appliance slightly.
	A component, e.g. a pipe, on the rear of the appliance is touching another part of the appliance or the wall.	If necessary, carefully bend the component out of the way.
Water on the floor	Water drain hole is blocked.	See the Cleaning section.
Side panel is hot	Condenser is inside the panel.	It’s normal.

If the malfunction shows again, contact the Service Center.

CKBLL-A01-A