To order Spare Parts, please contact us at 01 8428222, or email at sparesireland@glendimplex.com

BWC34BK Parts List

Spare Parts are stored in our Ireland warehouse, and are shipped with 48 hour courier
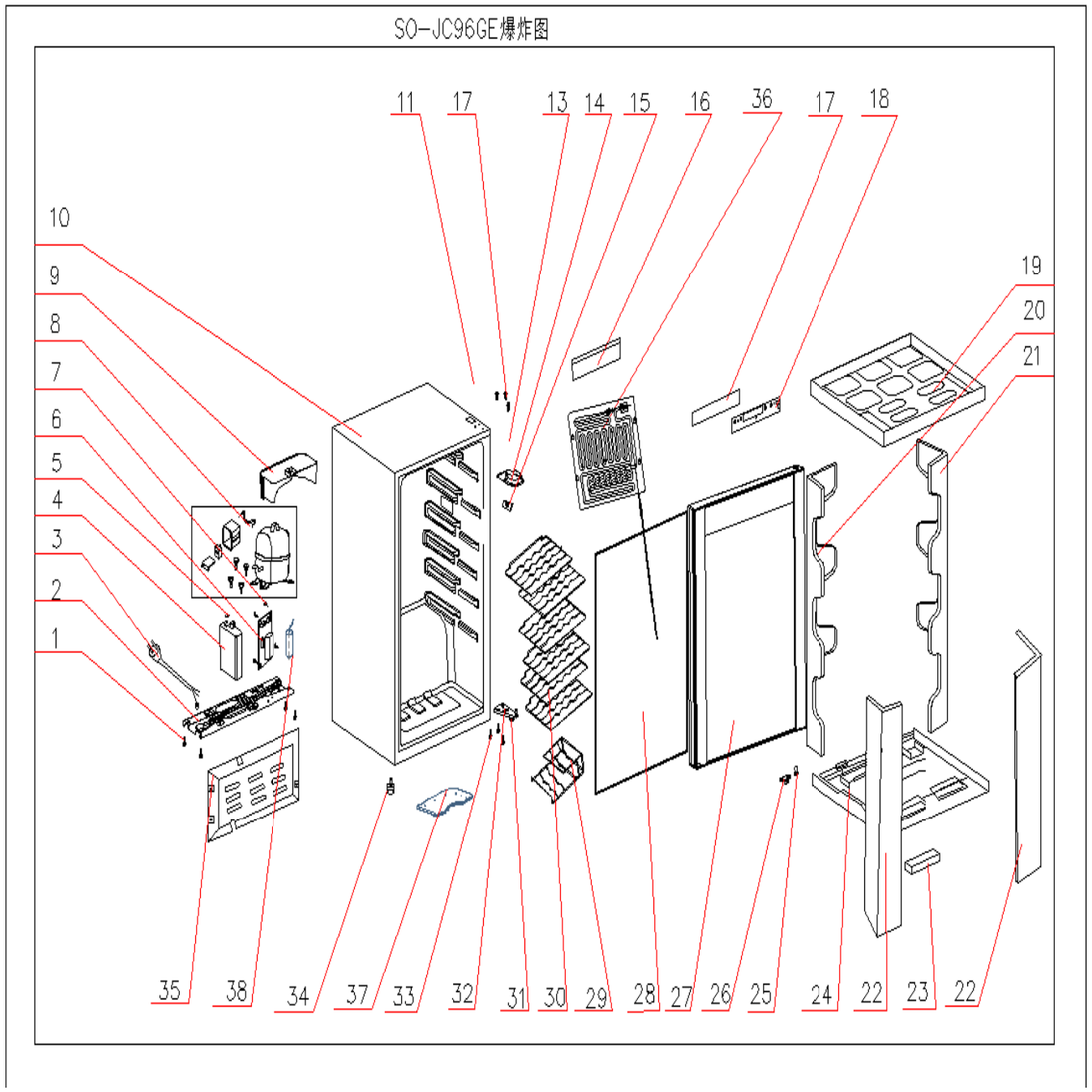
NO.	Spare Part	Description	Qty
6	17131000000142	BWC34BK Main Control PCB	1
9	12131000004272	BWC34BK Drain Tray	1
11	12131000005132	BWC34BK Upper Hinge Cover	1
13	12931000000552	BWC34BK Top Door Hinge	1
14	17431000000136	BWC34BK Led	1
15	12131000001178	BWC34BK Sensor Box Cover	1
16	12131000001139	BWC34BK Display Control End Cap	1
17	12431000000224	BWC34BK Sponge	1
18	17131000000027	BWC34BK Display Control PCB	1
25	12131000006211	BWC34BK Hinge Shaft Sleeve	1
26	12231000006558	BWC34BK Stopper	1
27	12531000001431	BWC34BK Glass Door	1
28	12131000010001	BWC34BK Door Seal	1
29	12931000000274	BWC34BK Bottom Wine Shelf	1
30	12931000000286	BWC34BK Wine Shelves	6
31	12131000001015	BWC34BK Adjustable Foot	1
32	12231000006850	BWC34BK Bottom Hinge	5
34	12131000000999	BWC34BK Adjustable Foot	1
37	12131000004323	BWC34BK Drain Tray	2
38	17431000001273	BWC34BK Capacitor	1